marantec
drive technology

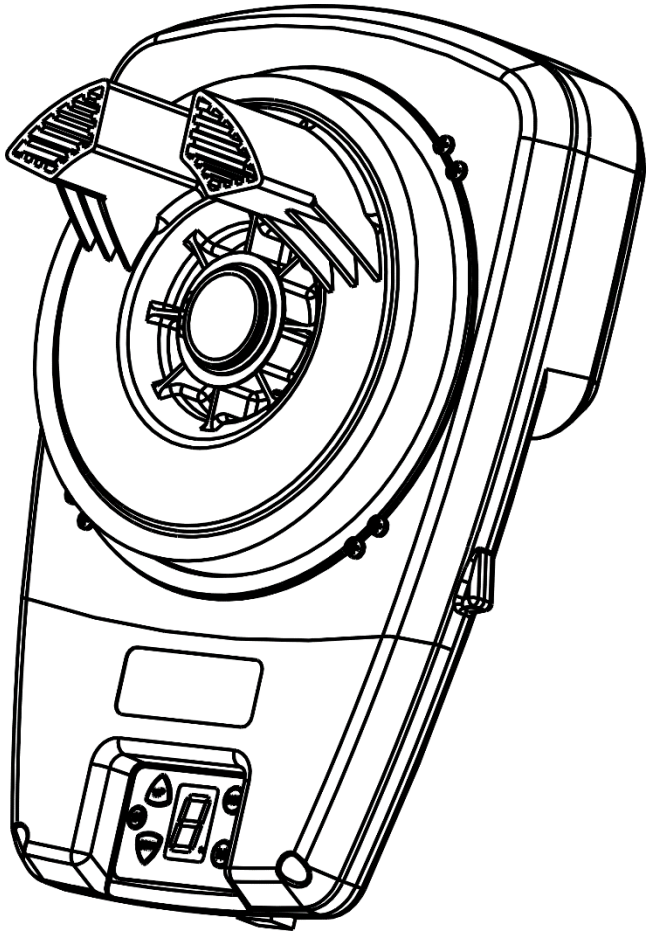

Dor Roller 45

Roller Door Opener
Installation and Operating Instructions

THIS MANUAL CONTAINS IMPORTANT SAFETY INFORMATION

DO NOT PROCEED WITH THE INSTALLATION BEFORE READING THIS MANUAL THOROUGHLY

www.dortech.co.za

Dec. 2022

Contents

User Information 1
Important Safety Instructions 2
Package Contents 3
Tools Required 3
Door Requirements 3
Testing the Door 4
Installing the Weight Bar 4
Installation Instructions 4-5
Using the Manual Release 5
Control Panel 6
Setting Direction of Operation 6
Setting Travel Limits 7
Safety Reverse Test 7
Safety Reversal Force Adjustment 8
Reset Opener 8
Warning Labels 8
Coding Wireless Transmitters 9
Safety Beam Installation 10
Auto-Close Timer 10
Maintenance Reminder 11
Technical Specifications 12
Troubleshooting 13
Warranty 14

User Information

Important Safety Notes:

A garage door is the largest automated moving object in most homes.
Care needs to be taken when using this system.

Like any other electrical appliance or machine, it is important to familiarise yourself with the safety guidelines which are applicable to automated garage doors. These are contained at the beginning and throughout this booklet.

The following summary highlights some of these safety guidelines:

- ✓ Only operate the garage door when in full view to ensure people, objects and pets remain away from the door whilst it is moving.
- ✓ Keep all controls away from children and do not allow them to play with the door.
- ✓ Regularly check the door and have it maintained and serviced as per the manufacturers' instructions.
- ✓ Safety beams or an equivalent safety device are recommended for any automated door for additional safety.

Standard Operation of the Door:

When the programmed remote transmitter (handset) button is pressed, it will start the door moving.
The next press of the button will stop the door.
The next press will start the door moving in the opposite direction.

Installation Details:

Installation Date:	
Installed by:	
Telephone Number:	

Please retain your receipt for warranty purposes. See page 14 for full Warranty Terms & Conditions.

Important Safety Instructions



FAILURE TO COMPLY WITH THESE SAFETY RECOMMENDATIONS AND LOCAL SAFETY REGULATIONS MAY RESULT IN SERIOUS INJURY, DEATH OR DAMAGE TO PROPERTY.

PLEASE READ CAREFULLY AND ENSURE THAT ALL SAFETY RECOMMENDATIONS AND REGULATIONS ARE CONSIDERED AND ADHERED TO.

Note: It is highly recommended that safety beams are included with all installations. Correctly installed safety beams will prevent the door from closing if a person or object is located within the door area. If the beam is broken during the door's downward travel it will reverse back to the open position.

This accessory must be used for all installations where the closing force is greater than 400N (40kg of force) as measured at the bottom of the door.

- This appliance is not intended for use by children or persons with reduced physical, sensory or mental capabilities, or lack of experience and knowledge, unless they have been given supervision or instruction by a person responsible for their safety.
- Do not wear watches, rings or loose clothing while installing or servicing a garage door opener. Ensure that gloves, safety goggles and suitable protective clothing is worn where appropriate.
- The opener must not be installed in a wet or damp space exposed to weather.
- The opener must not be used on a door with a wicket door (a door within a door).
- Keep garage door balanced. Do not let the opener compensate for a binding or sticking garage door. Binding, sticking or unbalanced doors must be repaired before installing this opener.
- To avoid serious personal injury from entanglement, remove all ropes, chains and locks connected to the garage door before installing the door opener.
- Installation and wiring must be in accordance with your local building and electrical codes.
- Install the wireless remote control (transmitter) in a location where the garage door is visible, at a height of no less than 1.5m and out of reach of children. Do not allow children to operate push buttons or transmitters. Serious personal injury from a closing garage door may result from misuse of the opener.
- Permanently fasten the Warning Labels in prominent places, adjacent to wall controls and on manual release cord as a reminder of safe operating procedures.
- Ensure that the safety reverse system is tested every month. The garage door must reverse on contact with a 40mm high object placed on the floor. Adjust if necessary and repeat test. Failure to adjust properly may result in serious personal injury from a closing garage door.
- Disconnect electric power to the door opener before making repairs.
- If the supply cord is damaged, it must be replaced by the manufacturer, its service agent or similarly qualified persons in order to avoid hazard.
- Frequently examine the door installation paying particular attention to the springs, tracks and mountings for signs of wear, damage or imbalance. Springs and hardware are under extreme tension and a fault can cause serious personal injury. Do not use if repair or adjustment is needed.
- Ensure that the opener is operated only when door is in full view, free of obstructions and the opener is properly adjusted. No one should enter or leave the garage while the door is in motion.
- Do not allow children to play near the door, or with door controls. Keep remotes away from children.
- The door may operate unexpectedly, therefore do not allow anything to stay in the path of the door.
- SAVE THESE INSTRUCTIONS- it is important for the safety of persons to follow all instructions.

An emergency key release must be installed if there is no pedestrian door or other access into the garage.

Package Contents

(1) Dor Roller 45 opener
(2) Hand transmitter (2)
(3) Wall transmitter
(4) Installation Instructions
(5) Warning label
(6) Weight bar (optional)
(7) Adaptor plate (optional)
(8) Manual release handle & cord

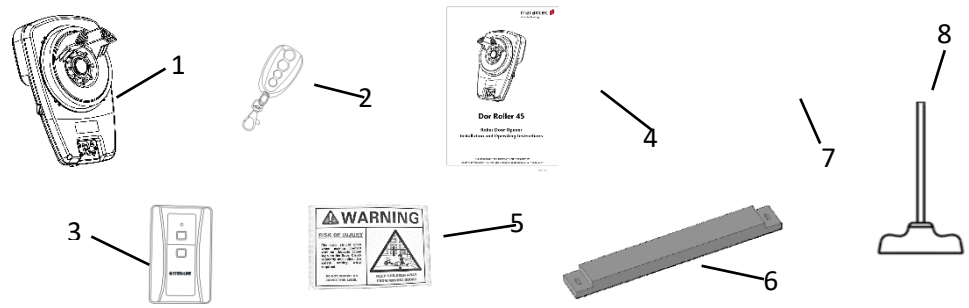

Tools Required

(1) Ladder
(2) Socket wrench
(3) 13mm socket
(4) Socket extension
(5) Adjustable wrench
(6) Philips head screwdriver
(7) Drill
(8) 6.5mm drill bit
(9) Marker pen

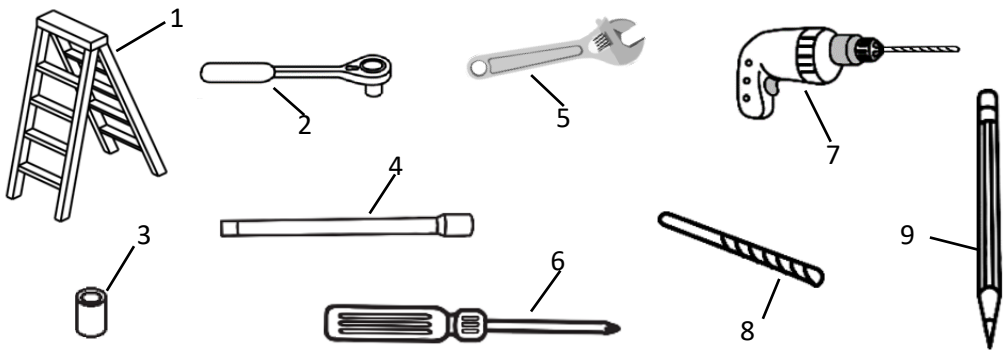

Door Requirements

- **This opener is not suitable for roller doors with wind locks.**
- The opener may be fitted to either the LEFT or RIGHT hand side of the roller door.
- Ensure there is a power point near the opener.
- The maximum allowable door height is 5.5m with a maximum curtain area of 16.5m². The door must be of continuous corrugated sheet construction and spring balanced. The door axle diameter must not exceed 35mm.

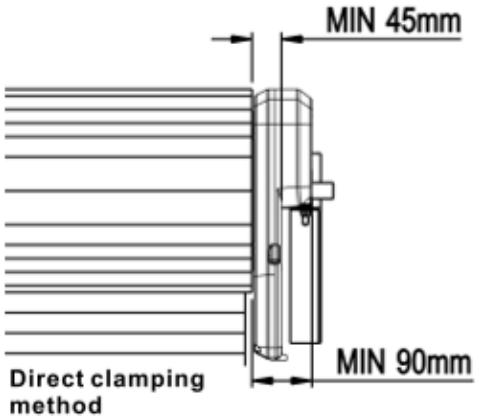

DOOR TYPE	SIDE CLEARANCE
A Series (25mm tracks)	90mm
AA/B Series (50mm tracks)	115mm

Ensure there is a minimum of 45mm from the edge of the curtain to the edge of the bracket. Additional clearance may be required if the roller door drum is on the edge of the curtain or is a smaller diameter. A fork extension kit may be required if the drum is more than 60mm from the edge of the curtain or a smaller diameter.

If the door is being fitted at the same time as a new door, read these instructions in conjunction with the door installation instructions. If the opener is being fitted to an existing door, make sure the door is properly balanced and operates smoothly.

Testing the Door

The following test must be completed prior to installing the opener to ensure the roller door is well balanced and not sticking or binding:

- All locks must be disabled and any ropes connected to the door must be removed.
- Lift the door approximately halfway and then release it. The door should remain spring balanced.
- Open and close the door to check for any binding or sticking points (20 kgf is the maximum allowable to raise or lower the door in any position).
- Call a qualified door technician if the door does not hold in place or if it binds or sticks.

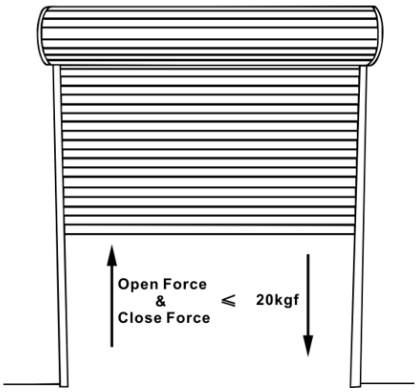

Installing the Weight Bar

A weight bar must be fitted to ensure the door does not balloon during operation.

If the door has a handle:

1. Remove the handle, nuts and bolts.
2. Position the weight bar over the existing handle holes, fit the handle back in place and insert extended bolts through handle and weight bar, securing firmly in place with the nuts.

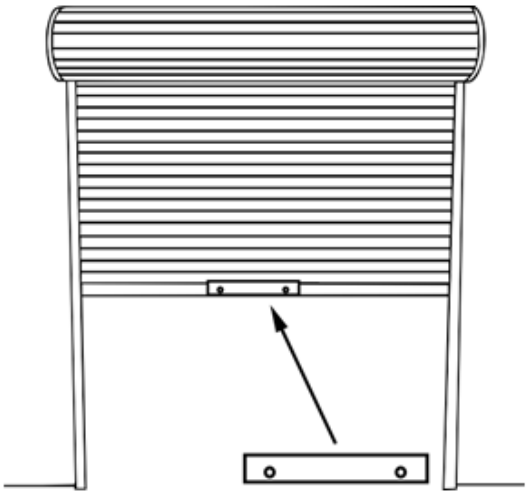

If the door has no handle:

1. Locate centre of door at the bottom rail and place the weight bar in this position.
2. Mark the two hole positions where the fasteners will go and remove the weight bar.
3. Drill the two 6.5mm holes through the marked positions and place the weight bar on the inside of the door.
4. Use the bolts and nuts provided to fasten the weight bar in place.

Installation Instructions

Do not allow anyone to walk around or under the door during the installation process as serious injury can occur.

STEP 1.
Fit the anti-coning collar against the drum wheel on the opposite end to where the opener is to be installed as shown in Fig 1. The anti-coning collar should be hard against the drum wheel and tightly secured to the door axle.

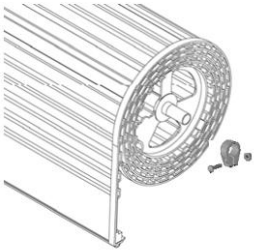

Fig 1.

STEP 2.
The safety reversal response may be delayed due to a ballooning door and can compromise garage security.

To prevent ballooning the curtain must be pinned by securely fixing self-tapping metal screws or rivets through the curtain and into the drum wheel. Fig 2. demonstrates how to determine the correct fastener location, where the curtain leaves the roll.

After determining correct fastener location, lift the door half a turn from closed position to allow access for drilling, see Fig 2.

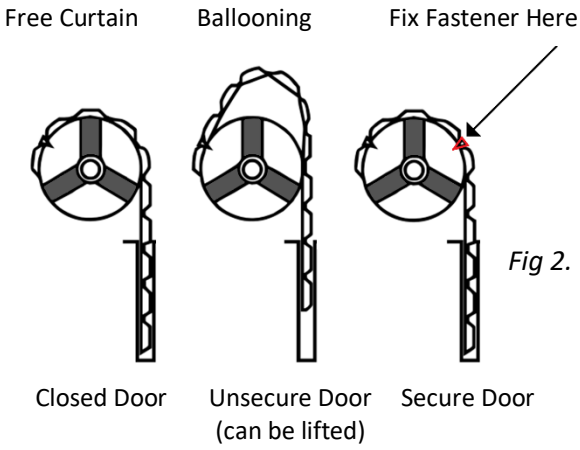

Fig 2.

STEP 3.

1. Ensure opener is in manual release mode, see page 5.
2. Open the roller door fully and tie a rope around the door for safety. The door should be supported with a door stand or similar device. See Fig 3.
3. Ensure that the door axle U-bolt on the opposite end of the door (to which the opener is to be fitted) is TIGHTENED securely. This U-bolt will hold all the spring tension on the door.
4. On the opener side mark the position of the door axle on the door mounting bracket (for reassembly purposes).
5. Remove the door axle U-bolt on the side where the opener will be installed and remove the door mounting bracket from the wall.
6. Slide the opener onto the door axle as shown in Fig 4. Ensure the drive forks engage fully with the narrowest spoke on the drum wheel. A fork extension kit may be necessary.
7. Refit the door mounting bracket to the wall.
8. Clamp the opener on the door axle and door bracket in the marked position using the clamp assembly supplied. Tighten firmly to 25-28Nm.
9. Remove all ropes and door support stand.
10. Check the operation of the door in manual mode by lowering and raising the door fully by hand. It should operate smoothly without sticking or binding.
11. Adjust the manual release cord so that the handle is no more than 1.8m above the floor.

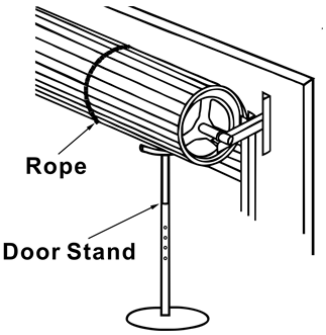

Fig 3.

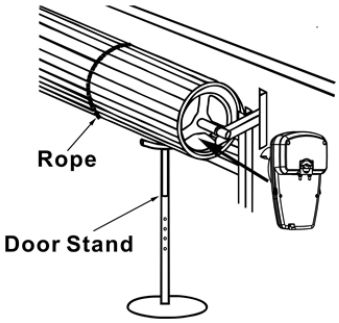

Fig 4.

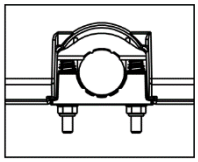
Tighten To 25-28Nm

Using the Manual Release

Care must be taken when operating the manual release. A door may fall rapidly due to broken or unbalanced springs.

To disengage the opener: Pull the release cord down firmly.

To re-engage the opener: Pull the release cord down firmly.

Ensure that all locks and ropes connected to the garage door are removed.

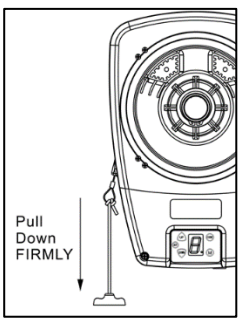

Control Panel

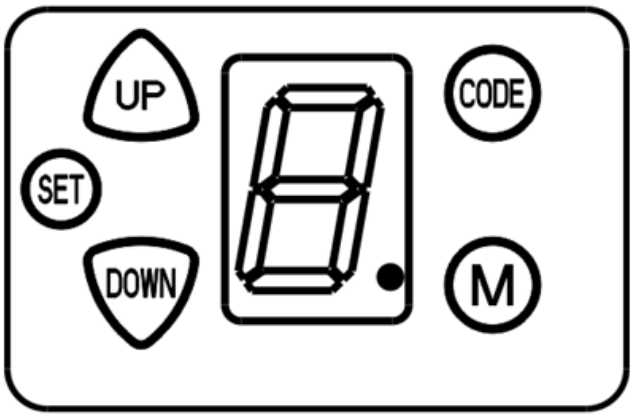

Pushbuttons

"SET" Button
- Initiates programming modes & saves the settings

"UP" Button
- Increases settings in programming mode
- Drives door up during programming

"DOWN" Button
- Decreases settings in programming mode
- Drives door down during programming

"CODE" Button
- Used for coding transmitters

"M" Button (Manual Operation)
- Open and close the door during normal operation

Setting Direction of Operation

The direction of operation must be programmed before proceeding to the travel limit setting procedure. Ensure the power is switched on before proceeding.

LEFT (L)
Follow Direction Setting Procedure below

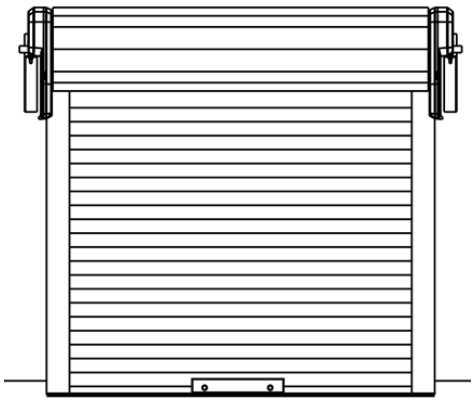

Inside Looking Out

RIGHT (r)
Factory default
Proceed to Setting Travel Limits – Page 7

Direction Setting Procedure

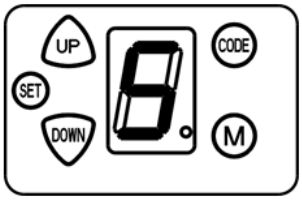

- Press and hold the "SET" button for 3 seconds until the LED flashes "1".
- Using the "UP" and "DOWN" buttons adjust LED to "5".
- Press the "SET" button.
- Using the "UP" and "DOWN" buttons select r or L as required
- Press the "SET" button. LED will display "– ".
- Proceed to Setting Travel Limits, page 7.

Setting Travel Limits

CAUTION: Make sure the opener is set for the correct side of installation before proceeding!

The travel limits regulate where the door stops when you operate the door UP and DOWN. Position the door at the halfway position and re-engage the opener by following the instructions on Page 5, *Using the Manual Release*.

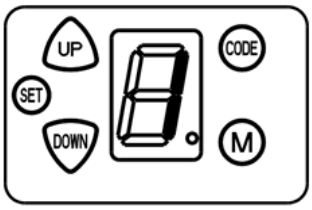

STEP 1.

- Press and hold the "SET" button for 3 seconds until the LED flashes "1".
- Press and hold the "SET" button again for 1 second until LED displays "1" steady.

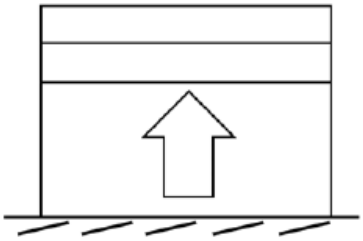

STEP 2.

- Press and hold the "UP" button to bring the door to the desired open position.
- At this point you can make slight adjustments "UP" and "DOWN" until the door is in the desired position.
- Press the "SET" button. LED will display "2" steady.

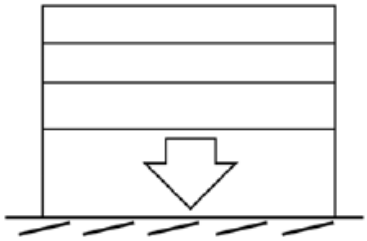

STEP 3.

- Press and hold the "DOWN" button to bring the door to the desired closed position.
- At this point you can make slight adjustments "UP" and "DOWN" until the door is in the desired position.
- Press the "SET" button. The opener will automatically operate a full cycle to remember the limit positions and the opening and closing force, then it will return to standby mode (LED will display "ıı").

Note: Open and close the door 3 or 4 times using the "M" button to ensure the limits are correctly set. It is important to now test the safety reverse feature, see page 7.

Safety Reverse Test

It is important that a safety reverse system test is carried out. The garage door must reverse on contact with a 40mm object placed flat on the floor. Incorrect force adjustment can result in serious injury.

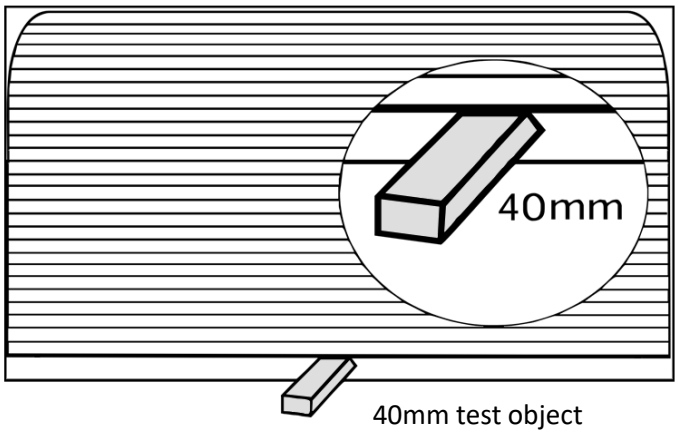

40mm test object

Operate the door to the closed position with the object in place under the door. The door must reverse upon contact with the object. If the door stops, but does not reverse, adjust the safety reversal force, see page 8.

Always repeat safety reverse test after adjusting force.

Safety Reversal Force Adjustment

The force, as measured at the bottom of the door, should not exceed 400N (40kgf). If this force is exceeded safety beams must be installed.

The maximum force is 9 and the minimum force is 1. The default force is set to 5.
If necessary, adjust the force.

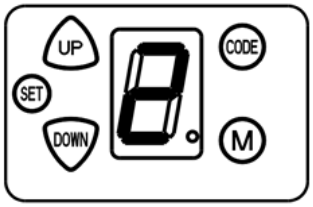

- Press and hold the “SET” button for 3 seconds until the LED flashes “1”.
- Using the “UP” and “DOWN” buttons adjust LED to “2”.
- Press the “SET” button.
- The LED will display the current set force.
- Press the “UP” button to increase the force and press the “DOWN” button to decrease the force.
- Press the “SET” button to confirm, then the opener will return to standby mode (LED will display “ıı”).

Reset Opener

Follow the below procedure to reset the opener back to factory default settings.

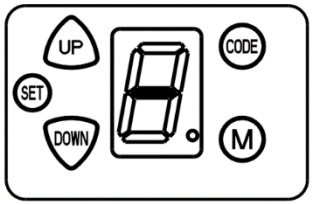

- Press and hold both the “UP” and “DOWN” buttons for 3 seconds until LED displays “–”.

The opener has been restored to factory default settings and must be reprogrammed again.

⚠	**IMPORTANT SAFETY NOTICE** After programming opener always conduct a safety check to test safety reversal system. Activate the opener only when door is in full view and free of obstruction. No one should enter or leave the garage while the door is in motion.

Warning Labels

Once installation is complete and the safety reversal test has been conducted successfully, install the warning label supplied with your opener.

The warning label should be installed in a prominent position near the opener.

The manual release handle should be no higher than 1.8m from the floor.

The wall control, or wireless wall button, should be mounted no less than 1.5m from the floor **out of reach of children.**

Read Important Safety Instructions on page 2.

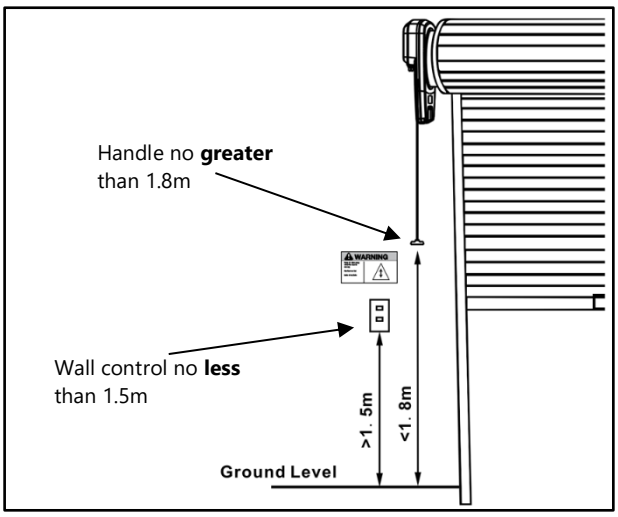

Coding Wireless Transmitters

The two (2) hand transmitters (remotes) and wireless wall switch supplied with your opener are preprogrammed at the factory.

Additional transmitters can be coded as follows:

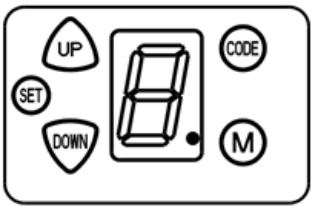

- Press and hold the “CODE” button for 1 second until the LED dot is on.
- Press button on transmitter once and the LED dot will go off.
- Press the same transmitter button again and the LED dot will flash 8 times, rapidly, then the opener will return to standby mode (LED will display “ıı”).
  Repeat above procedure for all additional handsets.

If you fail to press the transmitter button whilst in coding mode within 20 seconds, the opener will automatically return to standby mode.

Note: A maximum of twenty (20) codes can be stored by the opener. If you attempt to code more than twenty (20) transmitters the LED flashes “F” indicating that the memory storage is full. Follow the steps below to delete all of the transmitters that are stored in the receiver memory.

Deleting transmitters:

Note: This procedure will clear all programmed remotes, wireless wall buttons and wireless keypads from the opener.

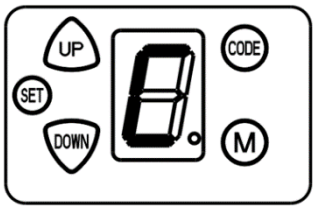

- Press and hold the “CODE” button for more than 8 seconds until the LED flashes “C”.
- All of the transmitters have now been deleted.
- The opener will return to standby mode (LED will display “ıı”).

Safety Beam Installation (Optional Accessory)

Note: This accessory must be used for all installations where the closing force is greater than 400N (40kg of force) as measured at the bottom of the door. It is highly recommended that safety beams are included with all installations. Correct installed safety beams will prevent the door from closing if a person or object is located within the door area. If the beam is broken during the door's downward travel it will reverse back to the open position.

SAFETY BEAM KIT PARTS

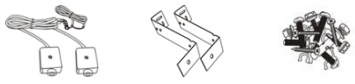

Motion Sensors | Sensor Brackets | Hardware

STEP 1.
Install sensor brackets no higher than 100mm from the floor on each side of door, behind tracks, ensuring they do not obstruct the door movement. Ensure that the lenses are aligned. Avoid positioning the sensors in direct sunlight as this could interfere with the operation of the safety beams.

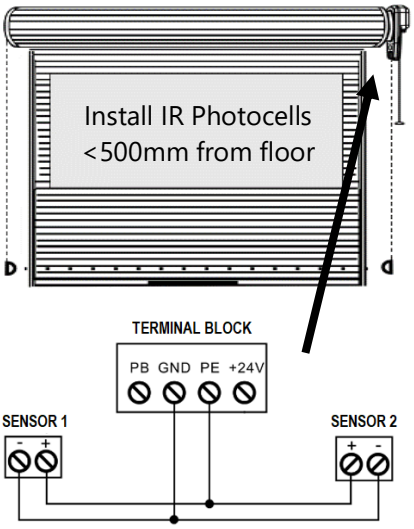

STEP 2.
Note: Ensure power is disconnected from opener before continuing.
Run the wire from both sensors back to the opener ensuring that they are well supported and ensuring they don't interfere with the movement of the door. Connect the wires to the green terminal block as per the diagram and insert the terminal block into the opener.

STEP 3.
Note: Ensure power is switched on before continuing.
The red and green lights on the sensor should be lit, indicating that they are correctly aligned.

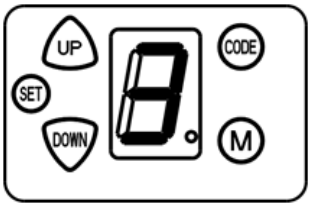

- Press and hold the "SET" button for 3 seconds until the LED flashes "1".
- Using the "UP" and "DOWN" buttons adjust LED to "3".
- Press the "SET" button.
- Using the "UP" and "DOWN" buttons adjust LED to "1" for ON and "0" for OFF.
- Press the "SET" button to confirm, then the opener will return to standby mode (LED will display "ıı").

Auto-Close Timer

Safety Beams must be installed to activate this feature.

When the Auto-Close Timer is enabled the door will close automatically after a preset period of time (1-9 minutes). During the door open waiting period the LED courtesy light will remain on. If an obstruction is detected during closing, the door will fully open and the Auto-Close Timer will begin again.

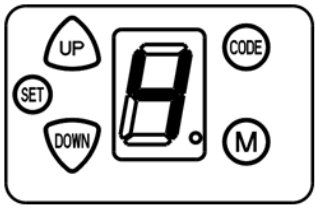

- Press and hold the "SET" button for 3 seconds until the LED flashes "1".
- Using the "UP" and "DOWN" buttons adjust LED to "4".
- Press the "SET" button.
- Using the "UP" and "DOWN" buttons select the desired auto-close time (1 to 9 minutes). Selecting "0" will turn the function off.
- Press the "SET" button to confirm.
- The opener will return to standby mode (LED will display "ıı").

Maintenance Reminder

The opener is equipped with a maintenance reminder feature which is activated by default at the factory. Once the opener reaches 3000 cycles “A” will flash on the LED display. **At this point we recommend that you contact a qualified garage door professional to carry out a service/preventative maintenance.**

When the opener reaches 3000 cycles follow these steps to **reset the maintenance reminder**:

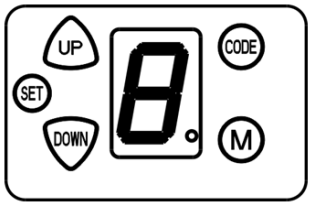

- Press and hold the “SET” button for 3 seconds until the LED flashes “1”.
- Using the “UP” and “DOWN” buttons adjust LED to “8”.
- Press the “SET” button and the LED will display “2”.
- Press and hold the “CODE” button for 5 seconds until the LED displays “1”.
- Press the “SET” button to confirm.
- The maintenance reminder will reset to zero and the opener will return to standby mode (LED will display “ıı”).

The maintenance reminder can be turned off before the opener reaches 3000 cycles. To turn off this feature “A” must not be flashing on the LED display. If the opener has reached 3000 and “A” flashes on the LED display, follow the steps above to reset the maintenance reminder before following the steps below to **turn off the feature:**

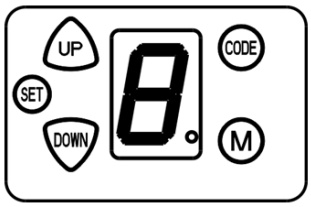

- Press and hold the “SET” button for 3 seconds until the LED flashes “1”.
- Using the “UP” and “DOWN” buttons adjust LED to “8”.
- Press the “SET” button and the LED will display “1” (function ON).
- Using the “UP” and “DOWN” buttons adjust LED to “0” (function OFF).
- Press the “SET” button to confirm.
- The maintenance reminder has been turned off and the opener will return to standby mode (LED will display “ıı”).

A poorly maintained door can cause property damage and result in serious or fatal injury.
Regularly check the following:

- ✓ Spring tension of your door by manually lifting it up and down.
- ✓ All fittings should be secure.
- ✓ Carry out the safety reverse test monthly, see page 7.
- ✓ Tracks should be regularly cleaned with a soft, damp cloth with methylated spirits or mineral turpentine. Never lubricate/grease tracks.

Adjustments to the door should only be carried out by an experienced garage door professional.
Failure to properly maintain your garage door and opener may void your warranty.

Technical Specifications

Electrical Specifications

Electrical Input	220-240V, 50/60Hz
Standby Power	<3W

Motor

Type	24V DC
Max Driving Force	1000N
Max Drum Rotations	5.5

Door Details

Max Door Size	18m²
Max Door Weight	120kg
Max Lifting Weight	45kg
Max Lift under Spring Tension	20kg
Max Door Height	5500mm
Travel Time	200mm/s

Dimensions

Dimensions (Powerhead)	400mm (L) x 260mm (W) x 190mm (H)
Weight (Powerhead)	6kg

Safety

Personal	Push button stop in UP and DOWN direction. Automatic safety reversal on closing and stop on opening.
Electronic	Automatic force adjustment
Limit Adjustment	Electronic
Feature	Soft start/stop

Courtesy Light

Type	24V LED (12 x ultra bright)
Lighting Time	3 minutes

Transmitter

Frequency	433.92Mhz
Coding Type	Rolling Code
Memory Register	20 handset codes
Operation Range	100m approx.
Battery	12V 27A

Troubleshooting

The opener does not work from either door control or remote hand transmitter.	• Does the opener have power? • If there is no light, check the fuse box or circuit breaker. • Check plug and contact an electrician if the power point is faulty.
Opener operates from door control but not from remote hand transmitter.	• Opener antenna is loose or not extended. • There may be interference nearby. • Flat battery. If necessary, replace battery in remote. • Follow procedure on page 9 to recode your remote.
Remote hand transmitter has short range.	• If necessary, replace battery in remote. • Change location of remote control in the car. • A metal garage door, foil insulation or metal side walls will reduce the transmitter range.
The door opens and closes by itself.	• Check to ensure that remote push button is not stuck on. • Delete all transmitter codes, see page 9. • Reprogram each remote to the opener, see page 9.
Cannot code new transmitters.	• Memory is full. Delete all stored transmitters and recode a maximum of 20 transmitters, see page 9. • New transmitter is not compatible with opener. Replace with genuine transmitters only.
The door automatically reverses to the open position before closing completely.	• If door is not correctly balanced call a garage door professional to correct the problem. • Re-set the travel limit. • Increase the safety reversal force, see page 8.
LED displays “C” and opener does not operate.	• Motor plug wire is loose. Consult an electrician. • Logic board is damaged. Replace logic board.
LED displays “≡” and opener does not operate.	• Drive motor is damaged. Replace opener.
LED displays “≡” and opener operates several centimeters.	• Damage to logic board or wiring. If necessary, replace logic board.
LED display flashes “A” during operation.	• Door has reached 3000 cycles and maintenance reminder has been activated, see page 11.

Warranty

Product: Dor Roller 45 Opener

This warranty is provided by Marantec SA, hereafter referred to as the manufacturer.

What is covered under this Warranty

1. When installed by a professional garage door technician in a residential/domestic single-family dwelling with a residential garage door, the manufacturer warrants to the original purchaser:
   a) that the Product's drive unit will be free from defects in components and workmanship for a period of five 1 year.
   b) that the electronics and mechanics will be free from defects in components and workmanship for a period of two 1 year;
   c) that all other components and accessories, including remote controlled transmitters included with the Product will be free from defects in components and workmanship for a period of 12 months.
2. For all Products repaired outside of the warranty period by the manufacturer, a 3 month warranty will apply to the work that has been carried out.

What is not covered under this Warranty

1. Batteries, fuses, globes, sensitivity and limit switch adjustment, transmitter and receiver range, labour and travel are not covered under this Warranty.
2. No additional warranty will apply for products repaired during the warranty period.

Warranty Conditions

1. Sales invoice must be retained to verify proof of purchase and date of installation.
2. A warranty claim does not cover labour for on-site support. The opener must be returned to the manufacturer for repairs in the original or suitably secure packaging.
3. The garage door that the product is used with must be spring balanced in such a way that the user is able to open and close the door by hand with a force no greater than 20kg.
4. The garage door must not weigh more than 120kg.
5. The garage door and the product must be professionally maintained and serviced regularly, in accordance with the instructions provided with the product, as a minimum every 12 months.
6. If the garage door is out of balance, sticks or binds, it must not be used until serviced by a professional garage door technician.
7. It is a condition of this Warranty that the Product must be installed and maintained by a professional garage door technician.
8. If the Product is purchased over the internet from an online reseller the manufacturer accepts no responsibility for determining the suitability of the Product and accepts no responsibility for unauthorised installation. For online purchases, the manufacturer will warrant to the original purchaser that all parts of the Product will be free from defects in components and workmanship for a period of 12 months from the date of purchase. All online purchase claims must be directed through the online reseller.

Making a claim

During the warranty period if you suspect the Product may be defective, contact the retailer that you purchased the product from or contact our technical support team and they will diagnose the issue and arrange for rectification.

Exclusions to this Warranty

If a warranty claim has been made due to a failure or defect arising under or out of any exclusion detailed below, the manufacturer may charge you a fee to repair, replace and/or return the Product to you.

The manufacturer will not cover any Product failure or defect due to:

1. non-conformity with the instructions concerning installation, maintenance, operation and testing of the Product;
2. installation of the Product in commercial or industrial premises or in a dwelling other than a single-family dwelling;
3. modification, adjustment, repairs or relocation of the Product by an unauthorised person;
4. problems relating to garage door hardware including springs, rollers, hinges, door alignment or other issues associated with lack of proper maintenance by a professional garage door technician;
5. normal wear and tear;
6. use of any imitation or copy remote transmitters with the Product;
7. water damage or condensation that causes corrosion or electrical malfunction;
8. corrosion or problems due to installation within 800m of the sea or body of water of equivalent or greater salt concentration;
9. electrical storms, power strikes, power surges, fire, water, flood, rain or other acts of God;
10. problems caused by blown fuses, replacement of batteries or light bulbs;
11. damage caused by insects or pests;
12. radio or electrical interference;
13. misuse, tampering, neglect, abuse, accidents or damage beyond the manufacturer's reasonable control.

Liability

Subject only to the provisions of the Trade Practices Act and any legislation of the state or territory wherein the Products of the company shall have been sold or installed (which may confer certain rights on consumers of goods and those rights by such legislation may be rendered incapable of exclusion) this warranty supersedes and excludes all representations, warranties and conditions whether expressed or implied by law and the company shall have no liability or otherwise that herein provided for any loss and damage (including consequential loss and damage, loss of use or profits) by reasons of delay, defective or faulty materials or workmanship, negligence or any act, matter or thing done permitted or omitted to be done by the company.

Notes:

Our goods come with guarantees that cannot be excluded under the Australian Consumer Law. You are entitled to a replacement or refund for a major failure and compensation for any other reasonably foreseeable loss or damage. You are also entitled to have the goods repaired or replaced if the goods fail to be of acceptable quality and the failure does not amount to a major failure.

Steel-Line Automation reserves the right to change our warranty, terms and conditions at any time without notice. We will constantly review our warranty and return policy to improve or update new information. Any changes to the policy will be updated on our website warranty page.

Marantec South Africa (Pty) Ltd
Durban Tel: 031 700 8260
Gauteng Tel: 011 205 0082
Email: sales@dortech.co.za